D-MI Aluminio

ALUMINUM PROFILE AND SYSTEM ASSEMBLY



CONTENTS

ALUMINUM PROFILES 2

PROFILE FASTENING ACCESORIES 9

CONNECTING SYSTEM 18

FLOOR ELEMENTS 30

GUARDS AND COVERS 35

ACCESSORIES 45

ALUMINUM PROFILES



20X20 PROFILE

MATERIAL / 6063 ALUMINUM	FINISH/ T5 NATURAL ANODIZED	LENGTH 6000mm - DMI.P2020.R06 LENGHT 100-5999MM - DMI.M2020.R06	
Ix	0.68 cm⁴	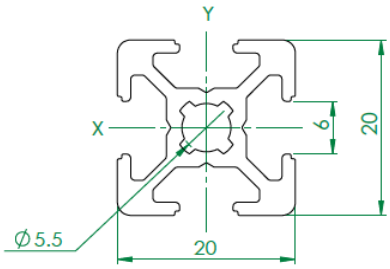	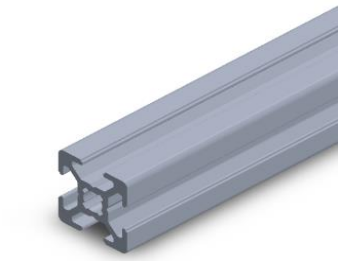
Iy	0.68 cm⁴		
Wx	0.68 cm³		
Wy	0.68 cm³		
G	0.44Kg/M		
A	1.63CM²		
PU	20 PIECES		

20X40 PROFILE

MATERIAL / 6063 ALUMINUM	FINISH/ T5 NATURAL ANODIZED	LENGTH 3000mm - DMI.P2040.R06 LENGHT 100 - 2999MM - DMI.M2040.R06	
Ix	4.61 cm⁴	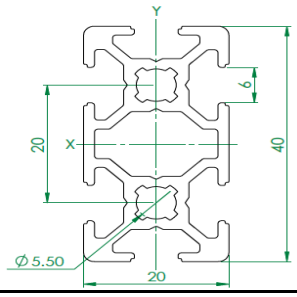	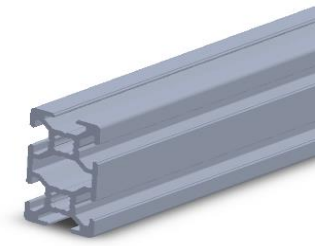
Iy	1.20 cm⁴		
Wx	2.31 cm³		
Wy	1.20 cm³		
G	0.77Kg/M		
A	2.87CM²		
PU	10 PIECES		

30X30 PROFILE

MATERIAL / 6063 ALUMINUM	FINISH/ T5 NATURAL ANODIZED	LENGTH 6000mm - DMI.P3030.R08 LENGHT 100 - 5999MM - DMI.M3030.R08	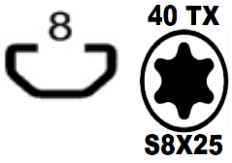
Ix	2.77 cm⁴	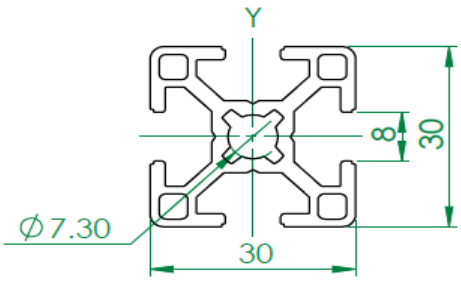	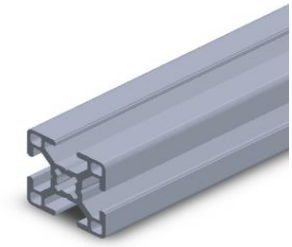
Iy	2.77 cm⁴		
Wx	1.85 cm³		
Wy	1.85 cm³		
G	0.85Kg/M		
A	3.14CM²		
PU	20 PIECES		

30X60 PROFILE

MATERIAL / 6063 ALUMINUM	FINISH/ T5 NATURAL ANODIZED	LENGTH 6000mm - DMI.P3060.R08 LENGHT 100 - 5999MM - DMI.M3060.R08	
Ix	19.66 cm⁴	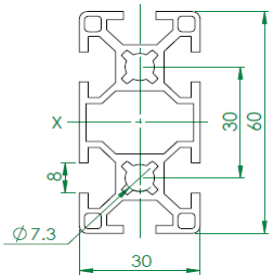	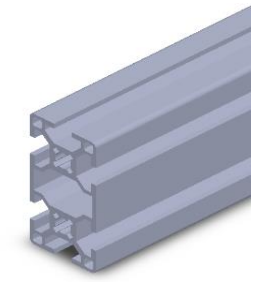
Iy	5.09 cm⁴		
Wx	6.55 cm³		
Wy	3.39 cm³		
G	1.49Kg/M		
A	5.53CM²		
PU	10 PIECES		

40X40 PROFILE

MATERIAL / 6063 ALUMINUM	FINISH/ T5 NATURAL ANODIZED	LENGTH 6000mm - DMI.P4040.R10 LENGHT 100 - 5999MM - DMI.M4040.R10	
Ix	9.06 cm⁴	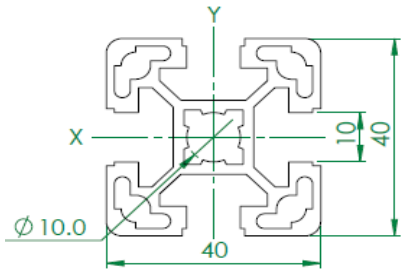	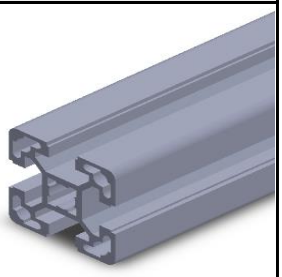
Iy	9.06 cm⁴		
Wx	4.53 cm³		
Wy	4.53 cm³		
G	1.51Kg/M		
A	5.61CM²		
PU	20 PIECES		

40X40 RADIAL PROFILE

MATERIAL / 6063 ALUMINUM	FINISH/ T5 NATURAL ANODIZED	LENGTH 6000mm - DMI.P4040.R.R10 LENGHT 100 - 5999MM - DMI.M4080.R10	
Ix	6.84 cm⁴	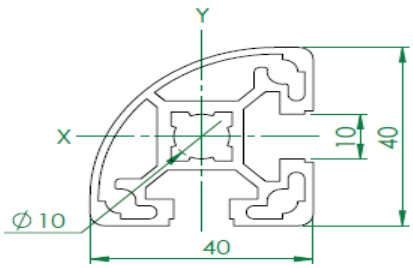	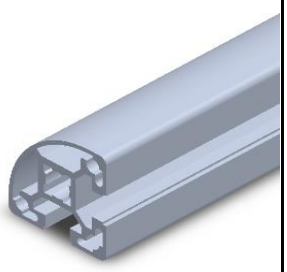
Iy	6.84 cm⁴		
Wx	3.06 cm³		
Wy	3.06 cm³		
G	1.28Kg/M		
A	4.75CM²		
PU	20 PIECES		

40X80 PROFILE

MATERIAL / 6063 ALUMINUM	FINISH/ T5 NATURAL ANODIZED	LENGTH 6000mm - DMI.P4080R10 LENGHT 100 - 5999MM - DMI.M4080R10	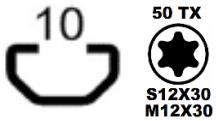
Ix	63.24 cm⁴	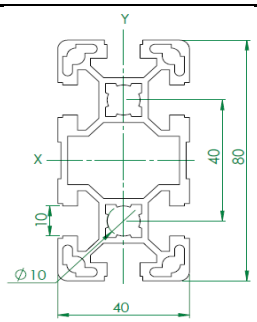	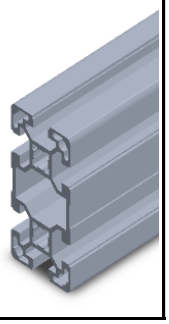
Iy	17.23 cm⁴		
Wx	15.81 cm³		
Wy	8.61 cm³		
G	2.67 Kg/M		
A	4.75 CM²		
PU	10 PIECES		

80X80 PROFILE

MATERIAL / 6063 ALUMINUM	FINISH/ T5 NATURAL ANODIZED	LENGTH 6000mm - DMI.P8080.R08 LENGHT 100 - 5999MM - DMI.M8080.R08 LENGTH 6000mm - DMI.P8080.R10 LENGHT 100 - 5999MM - DMI.M8080.R10	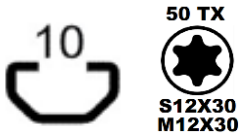
Ix	132.62 cm⁴	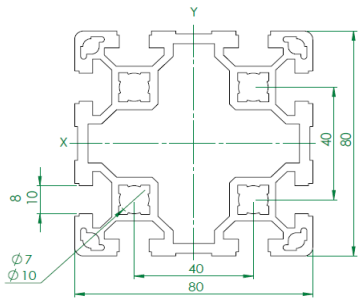	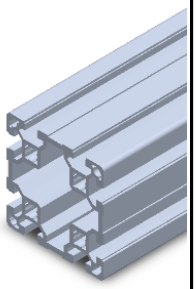
Iy	132.62 cm⁴		
Wx	33.16 cm³		
Wy	33.16 cm³		
G	4.98 Kg/M		
A	18.45 CM²		
PU	4 PIECES		

45X45 PROFILE

MATERIAL / 6063 ALUMINUM	FINISH/ T5 NATURAL ANODIZED	LENGTH 6000mm - DMI.P4545.R10 LENGHT 100 - 5999MM - DMI.M4545.R10	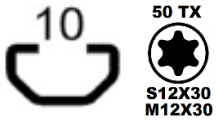
Ix	11.00 cm⁴	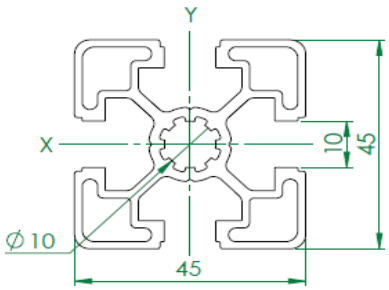	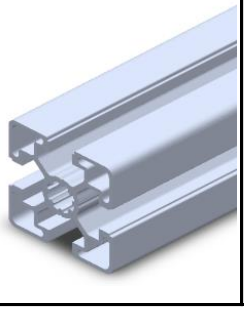
Iy	11.00 cm⁴		
Wx	4.89 cm³		
Wy	4.89 cm³		
G	1.55 Kg/M		
A	5.73 CM²		
PU	20 PIECES		

45X90 PROFILE

MATERIAL / 6063 ALUMINUM	FINISH/ T5 NATURAL ANODIZED	LENGTH 6000mm - LENGHT 100 - 5999MM -	DMI.P4590.R10 DMI.M4590.R10	10 — 50 TX — S12X30 M12X30
Ix	81.82 cm⁴	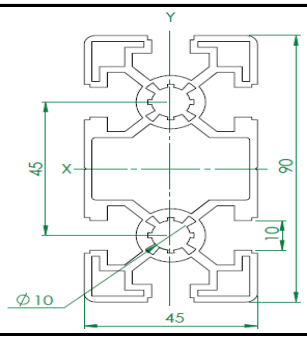		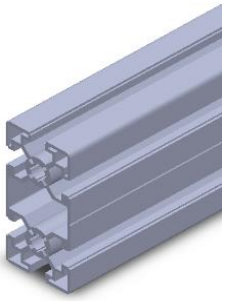
Iy	23.53 cm⁴			
Wx	18.18 cm³			
Wy	10.46 cm³			
G	3.05 Kg/M			
A	10.29 CM²			
PU	10 PIECES			

90X90 PROFILE

MATERIAL / 6063 ALUMINUM	FINISH/ T5 NATURAL ANODIZED	LENGTH 6000mm - LENGHT 100 - 5999MM -	DMI.P9090.R10 DMI.M9090.R10	10 — 50 TX — S12X30 M12X30
Ix	210.50 cm⁴	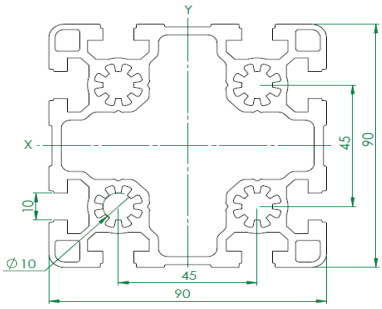		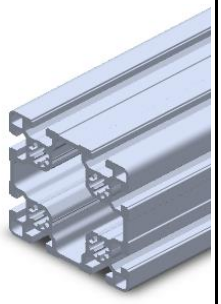
Iy	210.50 cm⁴			
Wx	46.78 cm³			
Wy	46.78 cm³			
G	6.34 Kg/M			
A	23.46 CM²			
PU	4 PIECES			

25X25 PROFILE

MATERIAL / 6063 ALUMINUM	FINISH/ T5 NATURAL ANODIZED	LENGTH 6000mm - LENGHT 100 - 5999MM -	DMI.P2525.R06 DMI.M2525.R06	6 — 25 TX — S6X16
Ix	UNAVAILABLE	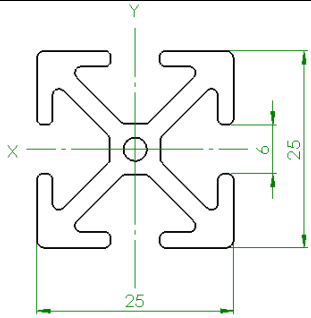		
Iy	UNAVAILABLE			
Wx	UNAVAILABLE			
Wy	UNAVAILABLE			
G	UNAVAILABLE			
A	UNAVAILABLE			
PU	20 PIECES			

60X60 PROFILE

MATERIAL / 6063 ALUMINUM	FINISH/ T5 NATURAL ANODIZED	LENGTH 6000mm - LENGHT 100 - 5999MM -	DMI.P.6060.R10 DMI.M.6060.R10	
Ix	31.71 cm⁴	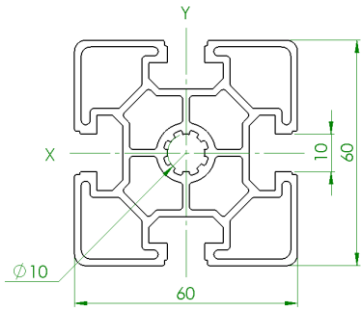		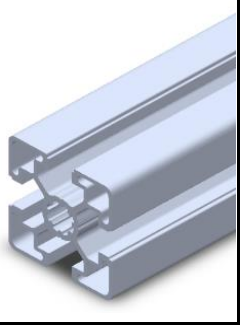
Iy	31.71cm⁴			
Wx	10.57 cm³			
Wy	10.57 cm³			
G	2.57 Kg/M			
A	9.52 CM²			
PU	10 PIECES			

D28 PROFILE

MATERIAL / 6063 ALUMINUM	FINISH/ T5 NATURAL ANODIZED	LENGTH 6000mm - LENGHT 100 - 5999MM -	DMI.P. D28 DMI.M. D28	
Ix	1.61 cm⁴	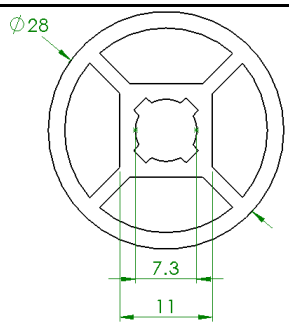		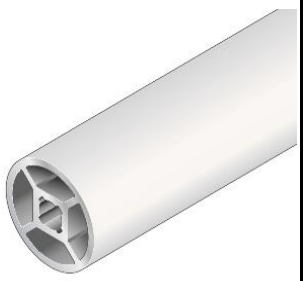
Iy	1.61 cm⁴			
Wx	0.58 cm³			
Wy	0.58 cm³			
G	0.71 Kg/M			
A	2.63 CM²			
PU	20 PIECES			

TUBE 28 PROFILE

MATERIAL / 6063 ALUMINUM	FINISH/ T5 NATURAL ANODIZED	LENGTH 6000mm - LENGHT 100 - 5999MM -	DMI.P. T28 DMI.M. T28	
Ix	6.84 cm⁴	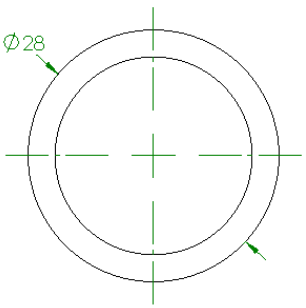		
Iy	6.84 cm⁴			
Wx	3.06 cm³			
Wy	3.06 cm³			
G	1.28Kg/M			
A	4.75CM²			
PU	20 PIECES			

ECO 28 PROFILE

MATERIAL / 6063 ALUMINUM	FINISH/ T5 NATURAL ANODIZED	LENGTH 6000mm - LENGHT 100 - 5999MM - DMI.P. ECO28 DMI.M. ECO28	
Ix	1.33 cm^4	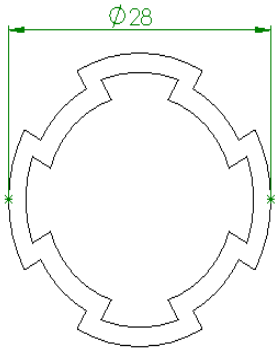	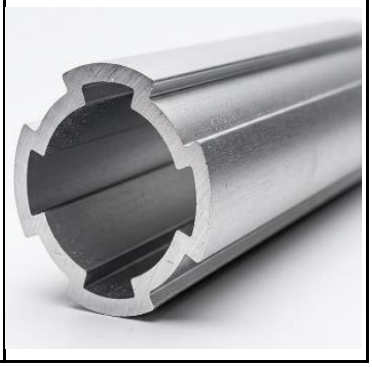
Iy	1.33 cm^4		
Wx	0.50 cm^3		
Wy	0.50 cm^3		
G	0.48 Kg/M		
A	1.79 CM^2		
PU	20 PIECES		

T ECO 28 PROFILE

MATERIAL / 6063 ALUMINUM	FINISH/ T5 NATURAL ANODIZED	LENGTH 6000mm - LENGHT 100 - 5999MM - DMI.P.T. ECO28 DMI.M.T. ECO28	
Ix	1.02 cm^4	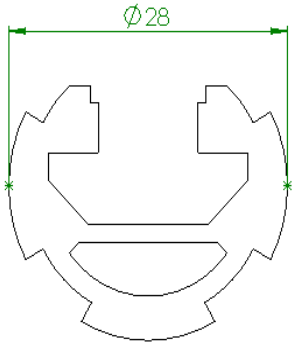	
Iy	1.02 cm^4		
Wx	0.88 cm^3		
Wy	1.41 cm^3		
G	0.71 Kg/M		
A	2.63 CM^2		
PU	20 PIECES		

PROFILE FASTENING ACCESORIES



S6X16 TORX SCREW

MATERIAL / CARBON STEEL 8.8	SURFACE/ ZINC BLUE	ITEM CODE	UNIT WEIGHT BAG /100 PCS

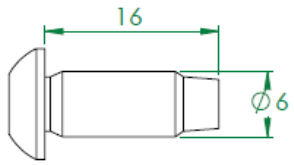

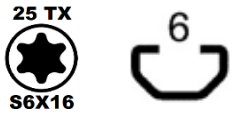





S8X25 TORX SCREW

MATERIAL / CARBON STEEL 8.8	SURFACE/ ZINC BLUE	ITEM CODE DMI.2307.010.002	UNIT WEIGHT / 11.50 gr BAG /100 PCS

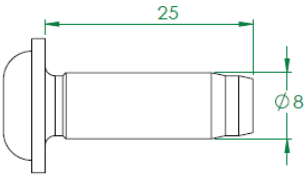

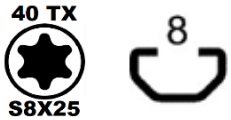





M12X30 TORX SCREW

MATERIAL / CARBON STEEL 10.9	SURFACE/ ZINC BLUE	ITEM CODE DMI.2305.010.102	UNIT WEIGHT / 29.50 gr BAG /100 PCS

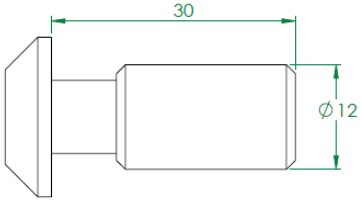







S12X30 TORX SCREW

MATERIAL / CARBON STEEL 8.8	SURFACE/ ZINC BLUE	ITEM CODE DMI.2305.010.101	UNIT WEIGHT/ 29.50gr BAG /100 PCS

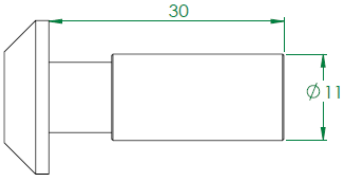

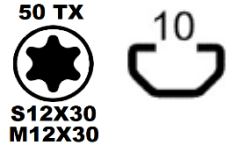





T BOLT



SIZE	DIMENTION	L	H	ITEM CODE	MATERIAL	SURFACE
M6	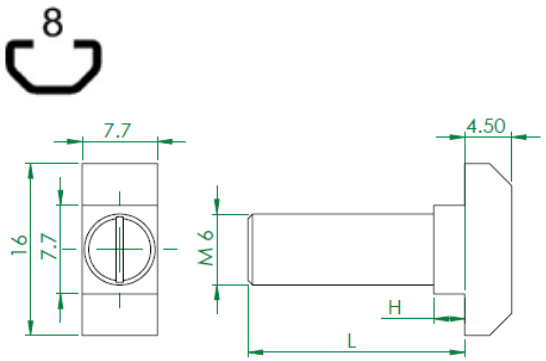	16	1.5	DMI.2302.008.001	CARBON STEEL 8.8	BLUE ZINC
M6		20		DMI.2302.008.002		
M6		25		DMI.2302.008.003		
M8	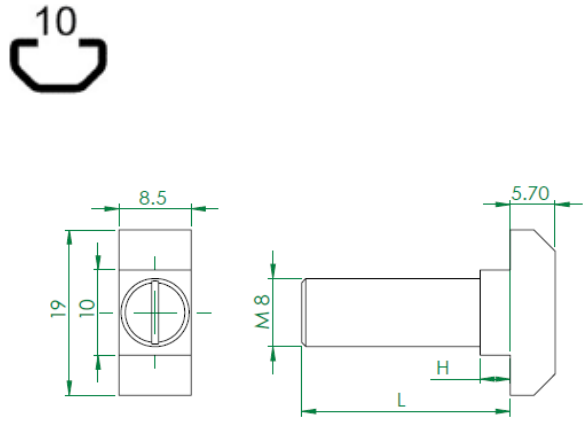	20	3	DMI.2302.010.001		
M8		25		DMI.2302.010.002		
M8		30		DMI.2302.010.003		
M8		40		DMI.2302.010.004		

ALLEN CYLINDER SCREW



SIZE	LEGHT	MATERIAL	SURFACE	ITEM CODE
M4 … M12	8…60 mm	STAINLESS (SL)	NATURAL	DMI. CY SIZE. LEGHT. MATERIAL EXAMPLE. DMI.CY. 04. 08. SL
		CARBON STEEL (CS)	BLACKED	

ALLEN BUTTON SCREW



SIZE (M)	LEGHT (L)	MATERIAL	SURFACE	ITEM CODE
M4 … M12	8…60 mm	STAINLESS (SL)	NATURAL	DMI. BU SIZE. LEGHT. MATERIAL EXAMPLE. DMI. BU. 04. 08. SL
		CARBON STEEL (CS)	BLACKED	

ALLEN FLAT SCREW



SIZE (M)	LEGHT (L)	MATERIAL	SURFACE	ITEM CODE
M4 … M12	8…60 mm	STAINLESS (SL)	NATURAL	DMI. FL SIZE. LEGHT. MATERIAL EXAMPLE. DMI.FL. 04. 08. SL
		CARBON STEEL (CS)	BLACKED	

FLANGE NUT



SIZE	DIMENTION	L	H	ITEM CODE	MATERIAL
M4	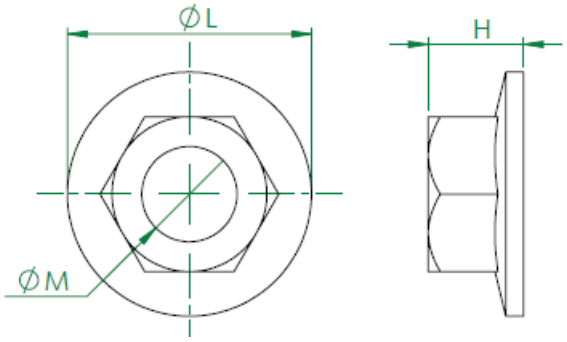	10	4.5	DMI-3601.000.001	CARBON STEEL
M5		11.5	5	DMI-3601.000.002	
M6		14.2	6	DMI-3601.000.003	
M8		17.9	8	DMI-3601.000.004	
M10		19.2	9.4	DMI-3601.000.005	
M12		26	12	DMI-3601.000.006	

HAMMER NUT



SIZE	DIMENCTION	ITEM CODE	UNIT WEIGHT gr	Material
M4	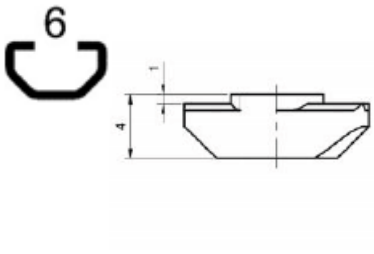	DMI. **2001.006.001**	1.00	Carbon Steel Zicn Blue
M5		DMI. **2001.006.002**	0.90	
M4	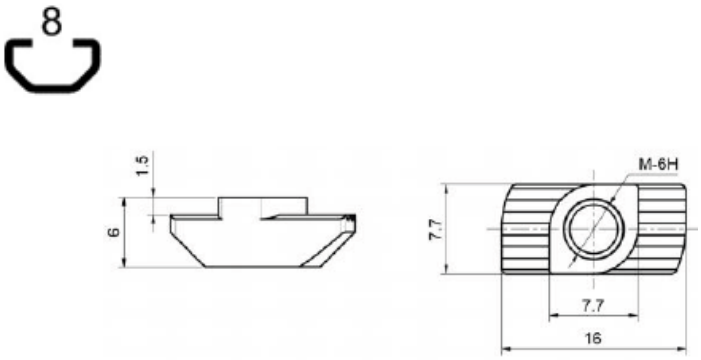	DMI. **2005.008.001**	3.70	
M5		DMI. **2005.008.002**	3.60	
M6		DMI. **2005.008.003**	3.50	
M4	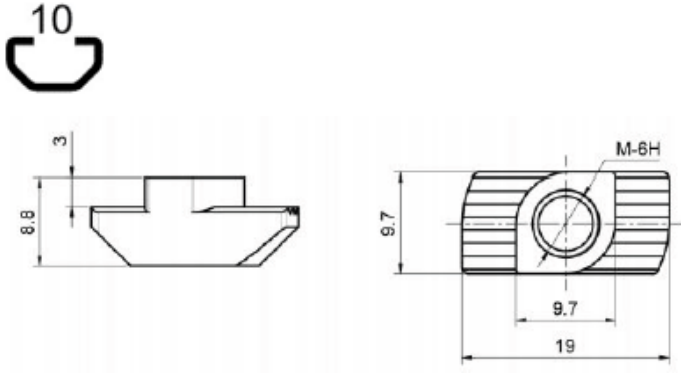	DMI. **2008.010.001**	7.90	
M5		DMI. **2008.010.002**	7.50	
M6		DMI. **2008.010.003**	7.00	
M8		DMI. **2008.010.004**	5.60	

T SLIDE NUT



SIZE	DIMENTION	ITEM CODE	UNIT WEIGHT gr	Material
M4	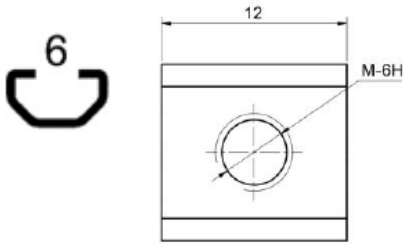	DMI. 2110.006.001	2.70	Carbon Steel Zinc Blue
M5		DMI. 2110.006.002	2.40	
M6		DMI.2110.006.003	2.10	
M4	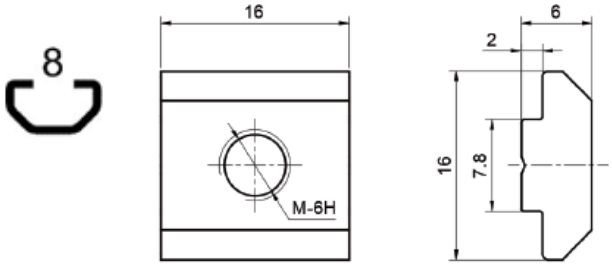	DMI. 2111.008.001	8.40	
M5		DMI. 2111.008.002	8.10	
M6		DMI. 2111.008.003	7.70	
M8		DMI. 2111.008.004	6.80	
M4	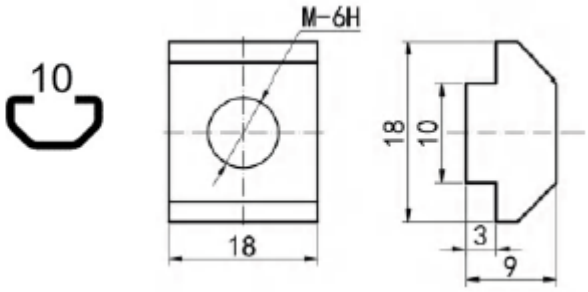	DMI. 2142.010.001	16.50	
M5		DMI. 2142.010.002	15.50	
M6		DMI. 2142.010.003	14.50	
M8		DMI. 2142.010.004	13.50	

T BALL NUT



SIZE	DIMENTION	ITEM CODE	UNIT WEIGHT gr	Material
M3	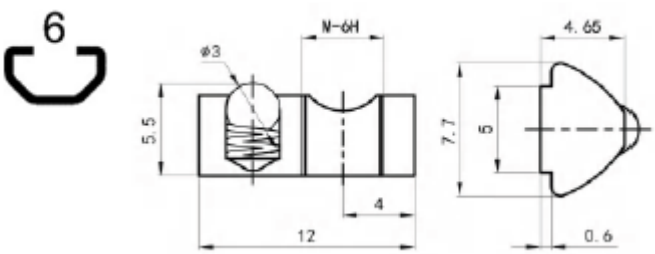	DMI. **2202.005.000**	2.10	Carbon Steel Zinc Blue
M4		DMI. **2202.005.00**	1.90	
M5		DMI. **2202.005.003**	1.70	
M4	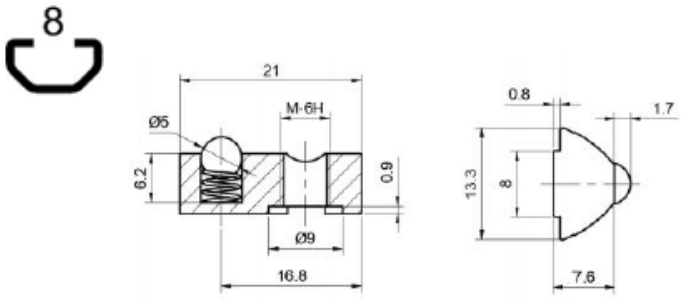	DMI. 2208.008.001	10.85	
M5		DMI. 2208.008.002	10.52	
M6		DMI. 2208.008.003	10.08	
M8		DMI. 2208.008.004	9.00	
M4	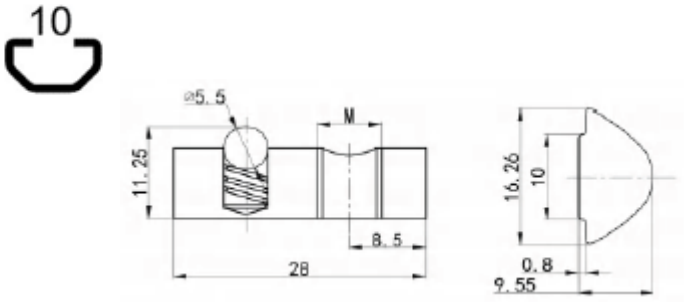	DMI. 2213.010.001	22.70	
M5		DMI. 2213.010.002	21.50	
M6		DMI. 2213.010.003	20.30	
M8		DMI. 2213.010.004	19.10	

T NUT WITH SPRING LEAF



SIZE	DIMENCTION	ITEM CODE	UNIT WEIGHT gr	Material
M4	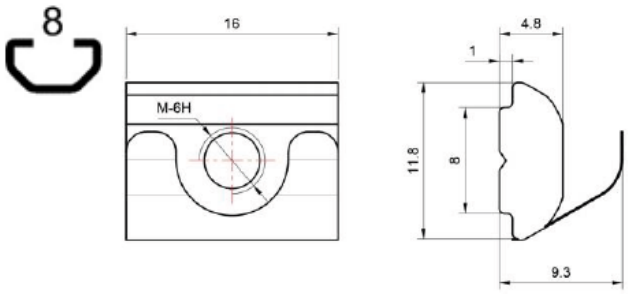	DMI. 3306.008.001	4.67	Carbon Steel Zinc blue
M5		DMI. 3306.008.002	4.45	
M6		DMI. 3306.008.003	4.25	
M8		DMI. 3306.008.004	3.85	
M4	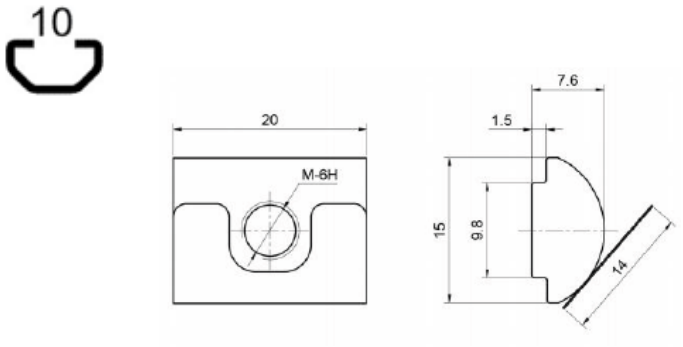	DMI. 3309.010.001	11.70	
M5		DMI. 3309.010.002	11.40	
M6		DMI. 3309.010.003	11.10	
M8		DMI. 3309.010.004	10.80	

CONNECTING SYSTEM



INNER CONNECTOR

Modelo A



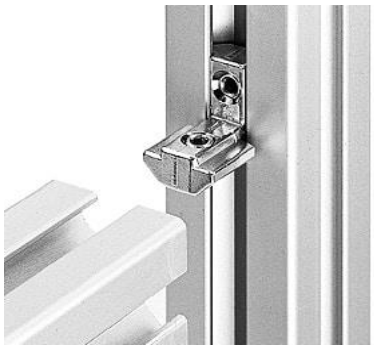

SIZE	DIMENSIONS	A	B	C	ITEM CODE	MATERIAL
R6	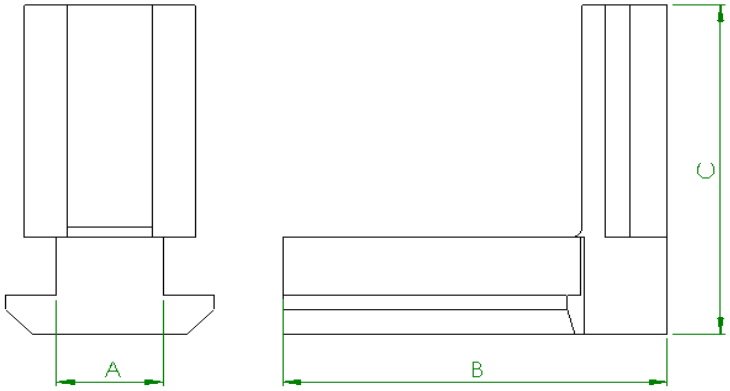	6	21	21	DMI 3905.006.001	ZINC ALLOY
R8		8	30	21	DMI 3905.008.002	
R10		10	38	32	DMI 3904.010.003	

Modelo B





R6	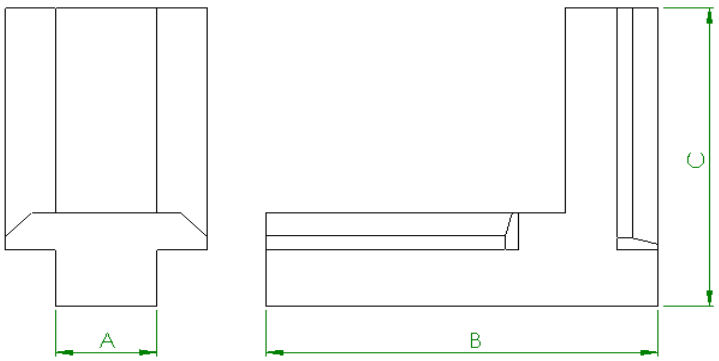	6	21	21	DMI. 3904.005.002	ZINC ALLOY
R8		8	30	21	DMI. 3920.008.000	
R10		10	38	32	DMI. 3920.010.000	

CONNECTION ANGLE



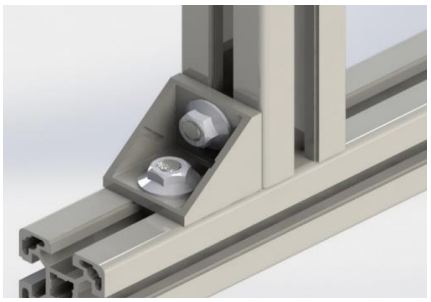

SIZE	DIMENSIONS	A	B	C	ITEM CODE	MATERIAL	FASTENING
20/20	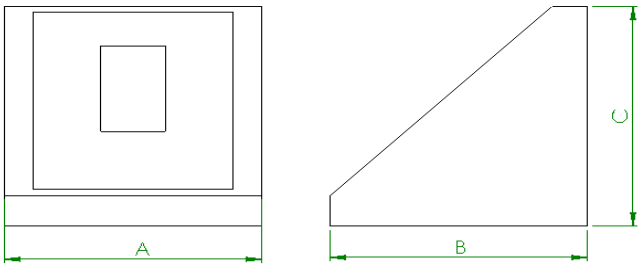	18	18	18	DMI. 2504.006.102	ALU ALLOY	2 Cylindrical Screw M4x8 2 T Nut M4 R6
30/30		28	27	27	DMI. 2504.008.104		2 Cylindrical Screw M6x14 2 T Nut M6 R8
40/40		38	36	36	DMI. 2504.010.106		2 T Bolt M8x20 2 Flange Nut M8 R10
45/45		42	42	42	DMI. 2504.010.108		2 T Bolt M8x25 2 Flange Nut M8 R10





SIZE	DIMENSIONS	A	B	C	ITEM CODE	MATERIAL	FASTENING
20/40	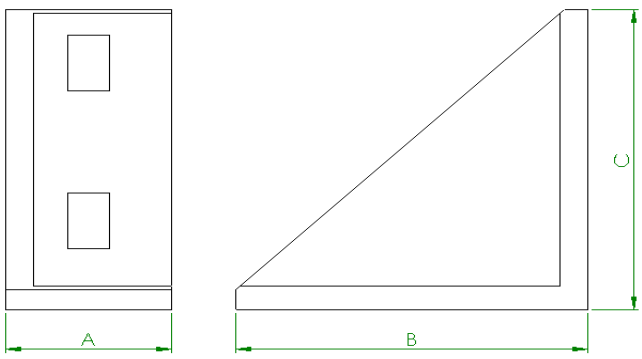	17.5	38	38	DMI. 2505.006.001	ALU ALLOY	4 Cylindrical Screw M4x8 4 T Nut M4 R6
30/60		28	58	58	DMI. 2505.008.102		4 Cylindrical Screw M6x14 4 T Nut M6 R8
40/80		36	80	80	DMI. 2505.008.103		4 T Bolt M8x20 4 Flange Nut M8 R10
45/90		42	88	88	DMI. 2505.008.104		4 T Bolt M8x25 4 Flange Nut M8 R10



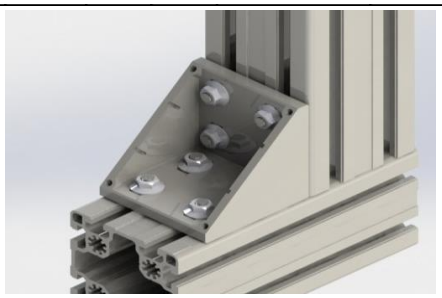

SIZE	DIMENSIONS	A	B	C	ITEM CODE	MATERIAL	FASTENING
60/60	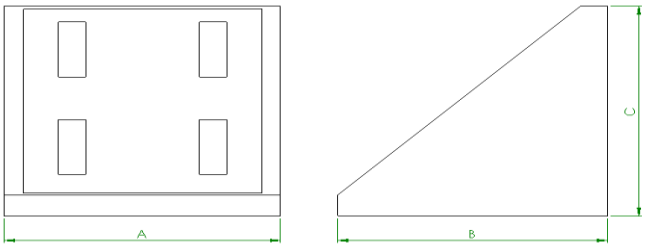	58	58	58	DMI-LAM-3024-60	ALU ALLOY	8 Cylindrical Screw M6x14 8 T Nut M6 R8
80/80		74	76	76	DMI. 2507.008.101		8 T Bolt M8x20 8 Flange Nut M8 R10
90/90		88	86	86	DMI. 2507.008.102		8 T Bolt M8x25 8 Flange Nut M8 R10

RADIAL CONNECTION ANGLE





SIZE	DIMENSIONS	A	B	C	ITEM CODE	MATERIAL	FASTENING
R8	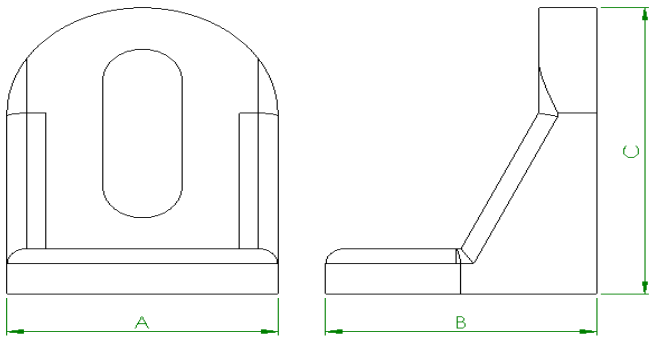	28	28	37.8	DMI. 2513.010.002	ALU ALLOY	2 Cylindrical Screw M6x16 2 T Nut M6 R8
R10		28	28	37.8	DMI. 2513.008.001		2 Cylindrical Screw M8x16 2 T Nut M6 R10
20		20	21.3	21.3	DMI. 2521.006.002		2 Flat Screw M5x8 2 T Nut M5 R6
30		30	30	30	DMI. 2521.006.003		2 Flat Screw M6x12 2 T Nut M6 R8
40		36	36	35	DMI. 2521.008.004		2 Flat Screw M8x16 2 T Nut M8 R10
45		38.2	43	43	DMI. 2521.010.004		2 Flat Screw M8X16 2 T Nut M8 R10

MITRE BRACKET





SIZE	DIMENSIONS	A	B	C	ITEM CODE	MATERIAL
R8	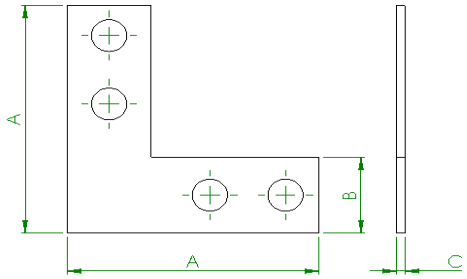	46	16	2	DMI LAM-3023-DE8	STEEL
R10		60	20	2	DMI LAM-3023-DE10	

FRONT CONNECTING BAR





SIZE	DIMENSIONS	A	B	C	ITEM CODE	MATERIAL
R6	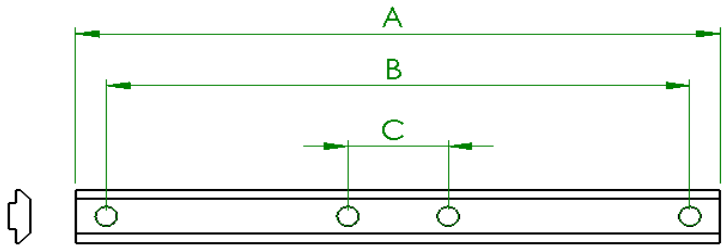	100	80	20	DMI 2152 .006.100	ZINC-FINISHED CARBON STEEL
R8		120	105	35	DMI 2113.008.003	
R10		140	110	30	DMI 2127.010.004	

2 WAYS CUBIC CONNECTOR





SIZE	DIMENSIONS	A	B	C	ITEM CODE	MATERIAL	FASTENING
20/2	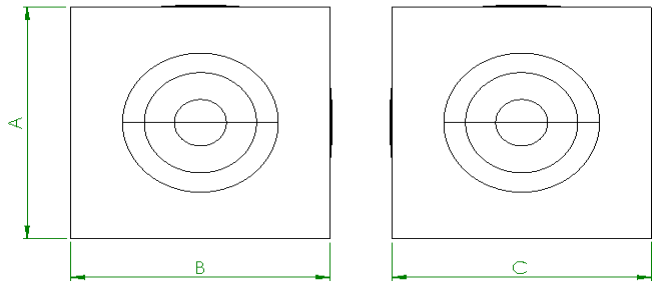	20	20	20	DMI. 3801.005.100	ALLU ALLOY	2 Self-tapping Bolt S6
30/2		30	30	30	DMI. 3801.006.100		2 Self-tapping Bolt S8
40/2		40	40	40	DMI. 3801.008.100		2 Self-tapping Bolt S12
45/2		45	45	45	DMI. 3801.010.100		2 Self-tapping Bolt S12

3 WAYS CUBIC CONNECTOR





SIZE	DIMENSIONS	A	B	C	ITEM CODE	MATERIAL	FASTENING
20/3	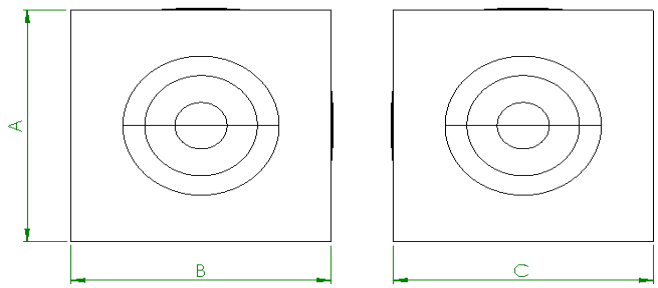	20	20	20	DMI. 3802.005.100	ALLU ALLOY	3 Self-tapping Bolt S6
30/3		30	30	30	DMI. 3802.006.100		3 Self-tapping Bolt S8
40/3		40	40	40	DMI. 3802.008.100		3 Self-tapping Bolt S12
45/3		45	45	45	DMI. 3802.010.100		3 Self-tapping Bolt S12

3 WAYS BALL CONNECTOR





SIZE	DIMENSIONS	A	B	C	ITEM CODE	MATERIAL	FASTENING
30X30	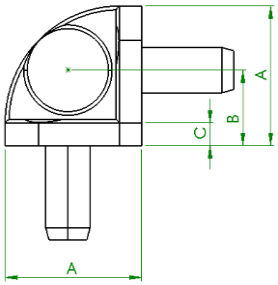	28	15	5	DMI-LAM-WB30R90-A2	ZINC ALLOY	3 Flat Screw M8x25
45X45		42	22.5	8.5	DMI-LAM-WB45R90-A		3 Flat Screw M12x30

PLATE CONNECTOR





SIZE	DIMENSIONS	A	B	C	ITEM CODE	MATERIAL
R8	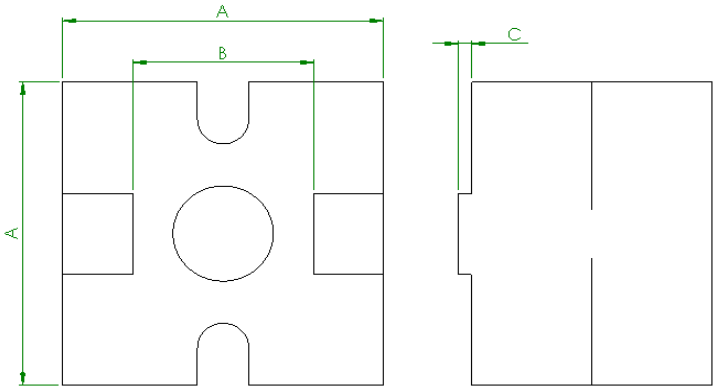	30	15	1.7	DMI-LAM-FE08-30	ALU ALLOY
R10		40	20	1.7	DMI-LAM-FE10-40	
R10		45	25	1.7	DMI-LAM-FE10-45	

135 ° ANGLE CONNECTION





SIZE	DIMENSIONS	A	ITEM CODE	MATERIAL	FASTENING
30/30	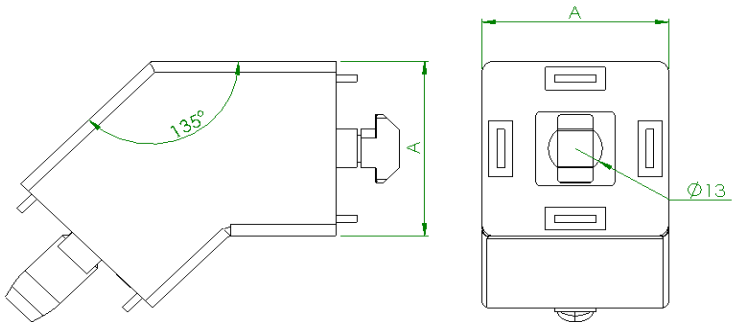	30	DMI. 2539.006.001	ALU ALLOY	2 Bolt S8X25
40/40		40	DMI. 2539.008.001		2 Bolt S12X30
45/45		45	DMI. 2539.010.001		2 Bolt S12X30

V QUICK CONNECTOR





SIZE	DIMENSIONS	A	B	C	ITEM CODE	MATERIAL
R6	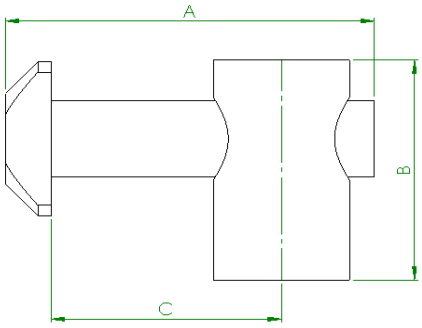	21.5	13.6	10	DMI 2401.006.000	CARBON STEEL
R8		33	20	18.5	DMI 2403.008.001	
R10		40	20	23	DMI 2404.008.001	

H QUICK CONNECTOR



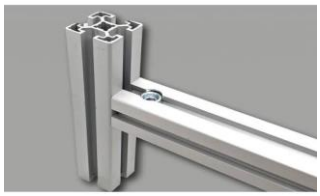

SIZE	DIMENSIONS	A	B	C	ITEM CODE	MATERIAL
R8	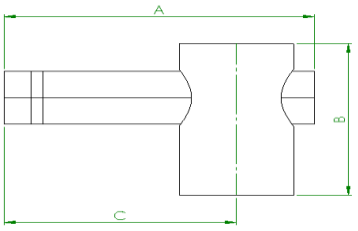	33	20	18.5	DMI 2403.008.002	CARBON STEEL
R10		40	20	23	DMI 2404.008.002	

FRONT QUICK CONNECTOR





SIZE	DIMENSIONS	A	B	C	ITEM CODE	MATERIAL
R8	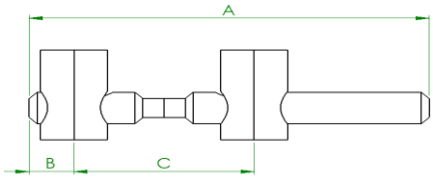	75	10	31	DMI 2407.008.000	STEEL+SS304
R10		100	15	37.5	DMI 2415.010.000	

ANGLE QUICK CONNECTOR





SIZE	DIMENSIONS	A	B	C	ITEM CODE	MATERIAL
R8	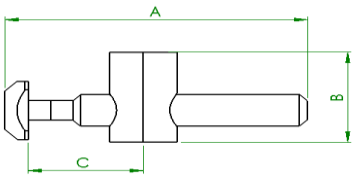	51	20	18.5	DMI 2402.008.000	STEEL+SS304
R10		75	28	26	DMI 2414.010.000	

PIVOT JOINTS







SIZE	DIMENSIONS	A	B	C	ITEM CODE	MATERIAL	FASTENING
30/30	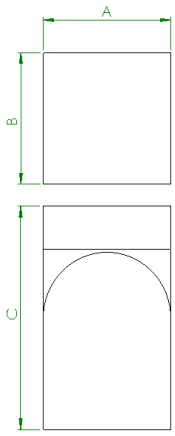	30	30	44	DMI 2601.006.000	ZINC ALLOY	2 Bolt S8X25
40/40		40	40	60	DMI 2603.008.500		2 Bolt S12X30
45/45		45	45	60	DMI 2605.010.000		2 Bolt S12X30



30/60	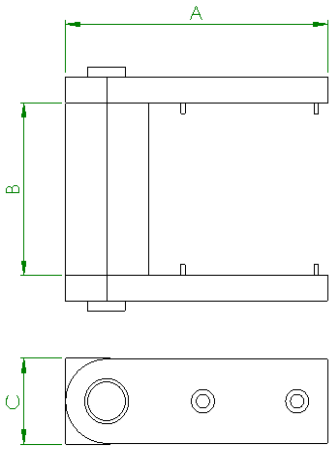	85	60	28	DMI 2610.3060.008	ALU ALLOY	2 Bolt S8X25 4 T Bolt M6x16 4 Flange Nut M6
40/80		120	80	38	DMI 2610.4080.010		2 Bolt S12X30 4 T Bolt M8x20 4 Flange Nut M8
45/90		140	90	42	DMI 2610.4590.010		2 Bolt S12X30 4 T Bolt M8x20 4 Flange Nut M8

TURNING PLATES



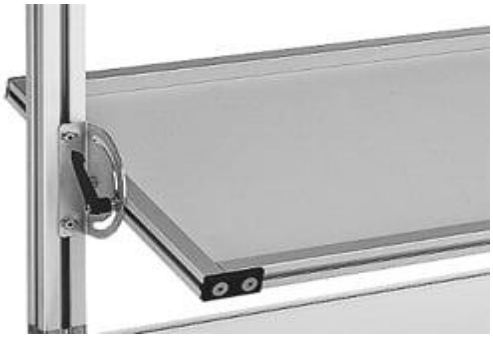

SIZE	DIMENSIONS	A	B	C	ITEM CODE	MATERIAL
R8	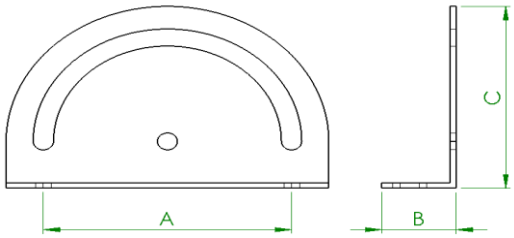	79.5	23.7	64.8	DMI 3910.006.001	STEEL
R10		100	29.9	87.5	DMI 3910.008.002	

CLAMPING LEVER





DIMENSIONS	A	B	C	D	ITEM CODE	MATERIAL
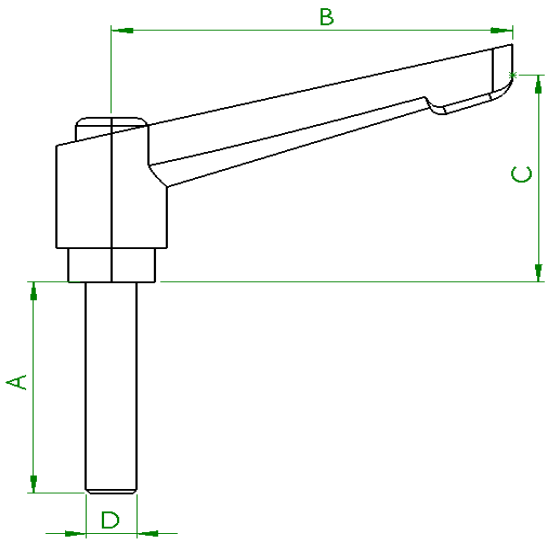	16,20,25, 30,40,50	50	40	M5	DMI-TH42-50-M5-A/ZC	ALUMINUM ALLOY
		50	40	M6	DMI-TH42-50-M6-A/ZC	
		63	43	M8	DMI-TH42-63-M8-A/ZC	
		80	55	M10	DMI-TH42-80-M10-A/ZC	
		95	63	M12	DMI-TH42-95-M12-A/ZC	
		114	75	M16	DMI-TH42-114-M16-A/ZC	

SIDE CONNECTION BLOCK

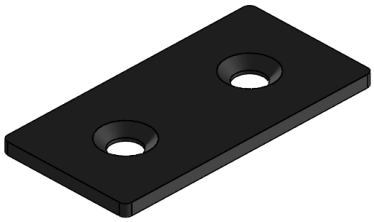



SIZE	DIMENSIONS	A	B	C	D	ITEM CODE	MATERIAL	FASTENING
20/20	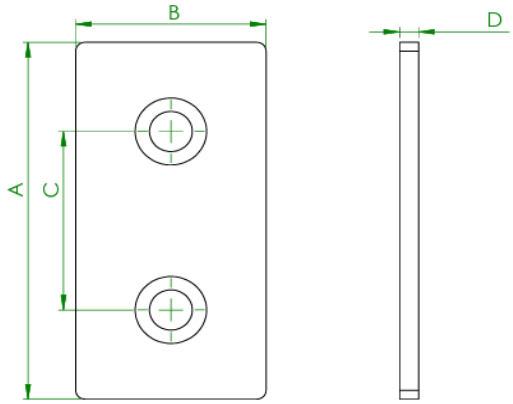	40	20	20	1.7	DMI 3022-20	CARBON STEEL	Flat Screw M5x8
30/30		60	30	30	2.5	DMI 3022-30		Flat Screw M6x10
40/40		80	40	40	3	DMI 3022-40		Flat Screw M8x12
45/45		90	45	45	3	DMI 3022-45		Flat Screw M8x12

D28 CONNECTOR

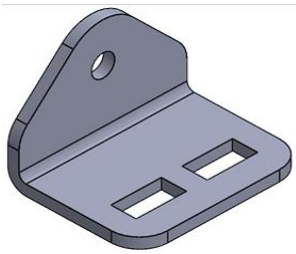



DIMENSIONS	ITEM CODE	MATERIAL
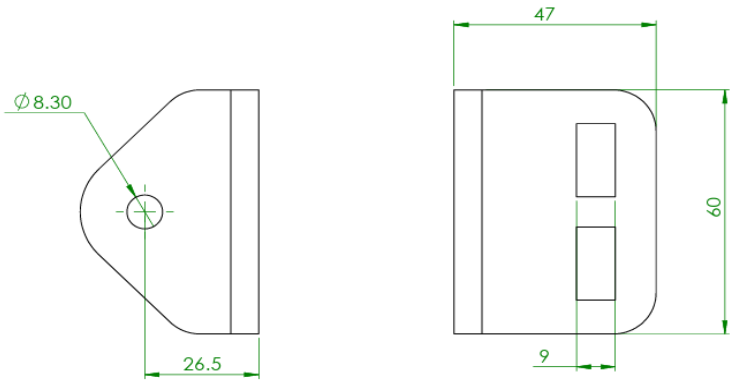	DMI-D28-102	CARBON STEEL

FLOOR ELEMENTS





FLOOR BRACKET





SIZE	DIMENSIONS	A	B	C	ITEM CODE	MATERIAL	FASTENING
45/180	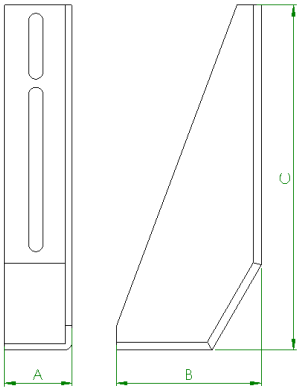	42.5	87	200	DMI. 4002.008.001	ALU ALLOY	T Bolt M8x20 Flange Nut M8





45/180	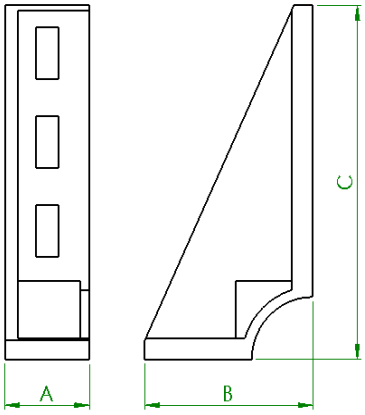	43	86	175	DMI. 4017.010.001	ALU ALLOY	T Bolt M8x25 Flange Nut M8

HARPOON ANCHOR



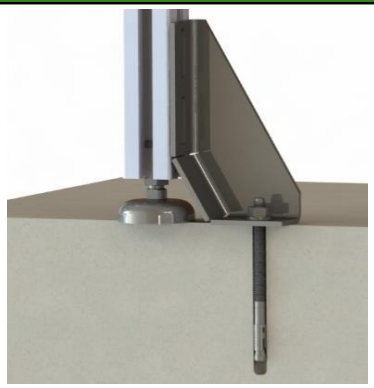

DIMENSIONS	A	B	ITEM CODE	MATERIAL
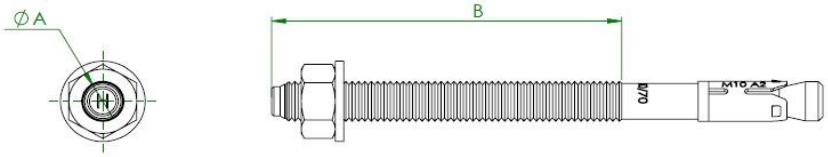	1/4 in	2 in	DMI-HAA-14-2	CARBON STEEL / ZINC
	3/8 in	3 in	DMI-HAA-38-3	

STOPPER PLATE





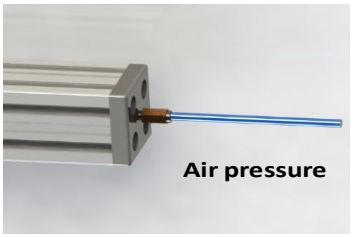

SIZE	DIMENSIONS	A	B	C	ITEM CODE	MATERIAL	COUNTER-BORE
40/80	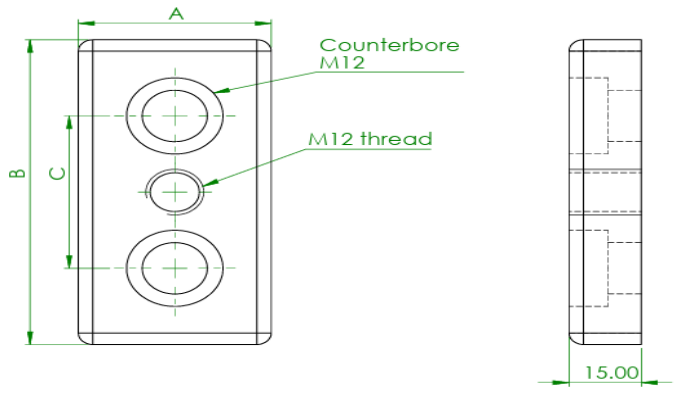	40	80	40	DMI TA12 4080	ALLU ALLOY	2
80/80		80	80	40	DMI TA12 8080		4
45/90		45	90	45	DMI TA12 4590		2
90/90		90	90	45	DMI TA12 9090		4

FLOOR MOUNTING PLATE



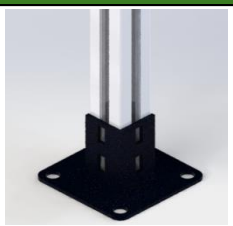

SIZE	DIMENSIONS	A	B	C	ITEM CODE	MATERIAL	FASTENING
40X40	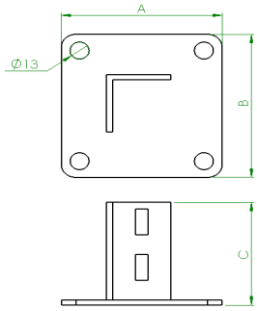	110	110	75	DMI-PB-40X40	CARBON STEEL	4 T Bolt M8x20 4 Flange Nut M8 R10
45X45		110	110	75	DMI-PB-45X45		4 T Bolt M8x25 4 Flange Nut M8 R10



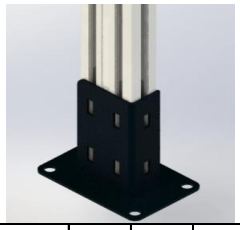

SIZE	DIMENSIONS	A	B	C	ITEM CODE	MATERIAL	FASTENING
40X80	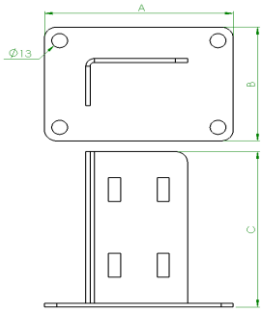	155	105	150	DMI-PB-40X80	CARBON STEEL	6 T Bolt M8x20 6 Flange Nut M8 R10
45X90		165	110	150	DMI-PB-45X90		6 T Bolt M8x25 6 Flange Nut M8 R10



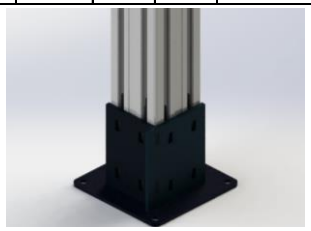

SIZE	DIMENSIONS	A	B	C	ITEM CODE	MATERIAL	FASTENING
80X80	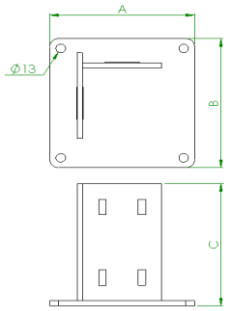	80	95	155	DMI-PB-80X80	CARBON STEEL	8 T Bolt M8x20 8 Flange Nut M8 R10
90X90		165	165	156	DMI-PB-90X90		8 T Bolt M8x25 8 Flange Nut M8 R10

LEVELING FEET





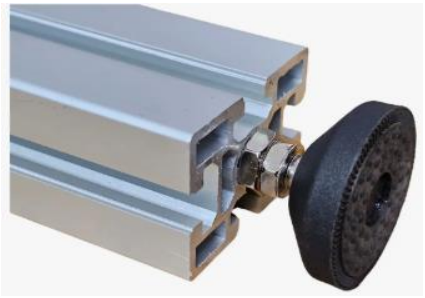

DIMENSIONS	D	M	L	ITEM CODE	MATERIAL
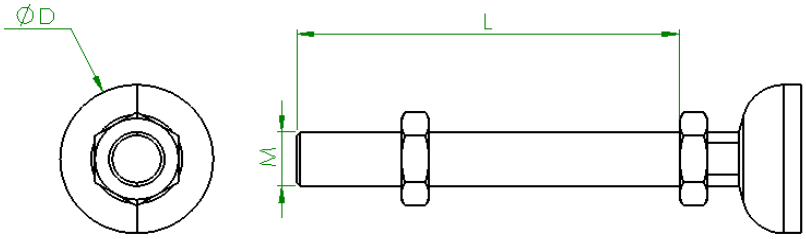	40	M8	75	DMI-MF18-40-M8-75-CS	CARBON STEEL
	40	M12	100	DMI-MF18-40-M12-100-CS	
	40	M8	75	DMI-MF15-40-M8-75-CS	CARBON STEEL
	40	M12	100	DMI-MF15-40-M12-100-CS	

THREADED BUSHING





DIMENSIONS	ITEM CODE	MATERIAL
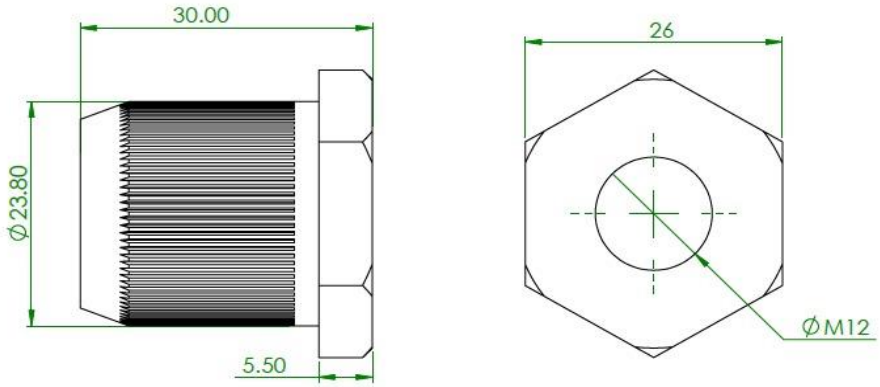	DMI-MR-12	CARBON STEEL

GUARDS AND COVERS



BALL LATCH





SIZE	DIMENSIONS	ITEM CODE	MATERIAL
40/45	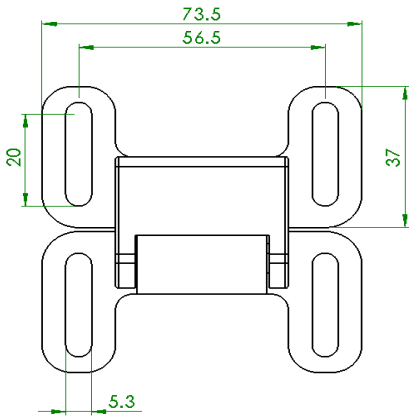	DMI. 3203.010.000	NYLON

DOOR LOCK





DIMENSIONS	ITEM CODE	MATERIAL
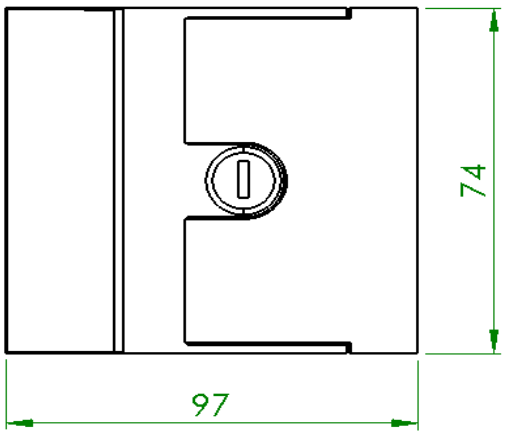	DMI. 3216.001.000	ALU ALLOY

HOOK LATCH

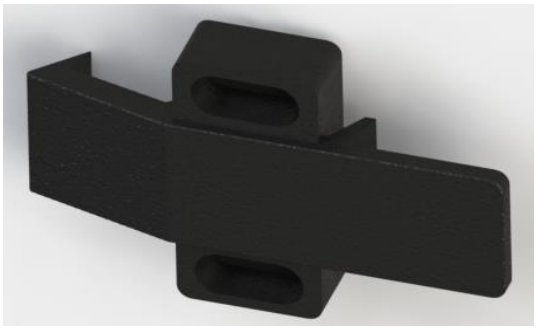



DIMENSIONS	ITEM CODE	MATERIAL
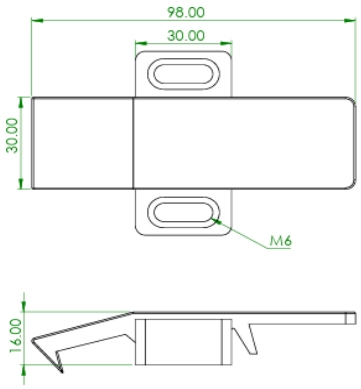	DMI 3233.3040.000	NYLON / ALU ALLOY

MAGNETIC LATCH



DIMENSIONS	ITEM CODE	MATERIAL
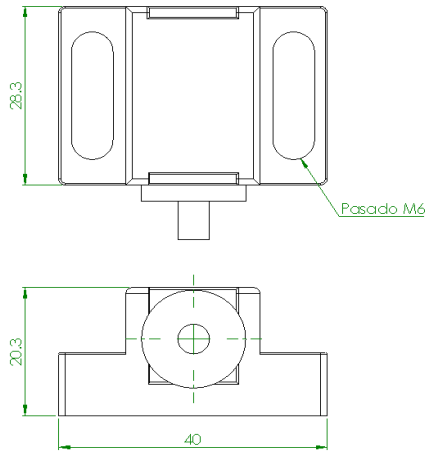	DMI- TSIM-0200	NYLON

HINGE





SIZE	DIMENSIONS	A1	A2	B	C	D	E	ITEM CODE	MATERIAL
20/20	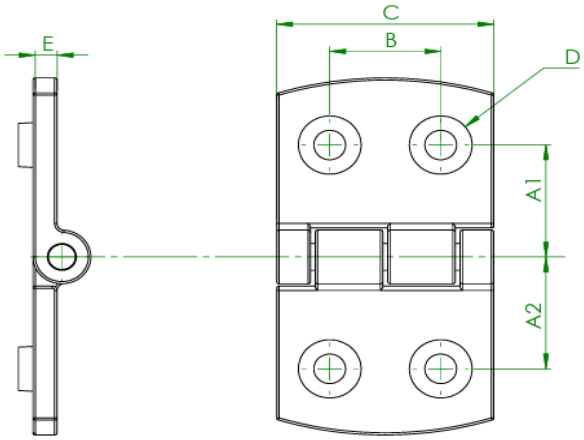	11.5	11.5	17	33	Flat Screw M4X10	6	DMI SC 20	NYLON
30/30		17.5	17.5	28	50	Flat Screw M6X12	9	DMI-3002.006.001	
40/40		22.5	22.5	28	50	Flat Screw M6X16	9	DMI 3002.008.001	
45/45		25	25	28	50	Flat Screw M6X16	9	DMI 3002.010.001	
20/20		11.5	11.5	17	33	Flat Screw M4X10	6	DMI-SCHM20	ALU ALLOY
30/30		17.5	17.5	28	50	Flat Screw M6X12	9	DMI 3052.006.001	
40/40		22.5	22.5	28	50	Flat Screw M6X16	9	DMI 3052.008.001	
45/45		25	25	28	50	Flat Screw M6X16	9	DMI 3052.010.001	

HANDLE





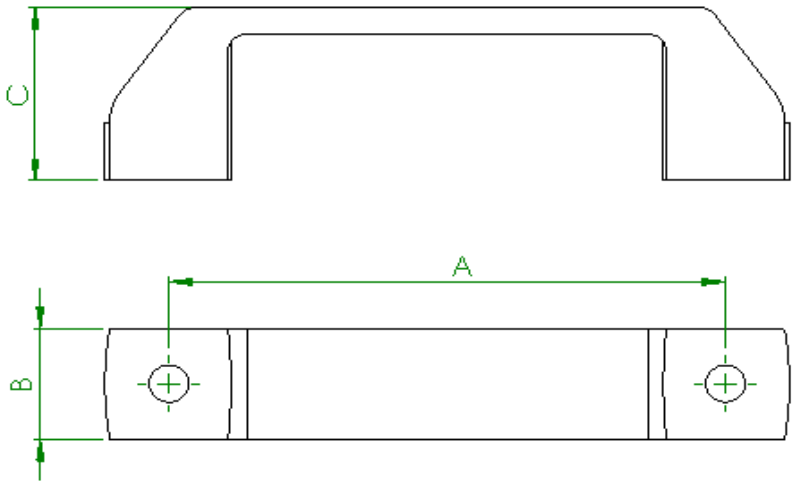

DIMENSIONS	A	B	C	ITEM CODE	MATERIAL
	90	19.3	35.5	DMI 2701.000.001	ALU ALLOY
	120	24	39	DMI 2701.000.002	
	180	28.5	50	DMI 2701.000.003	
	90	20.5	37	DMI 2702.000.001	NYLON
	120	25.5	40	DMI 2702.000.002	
	180	28	50	DMI 2702.000.003	

COVER SLOT



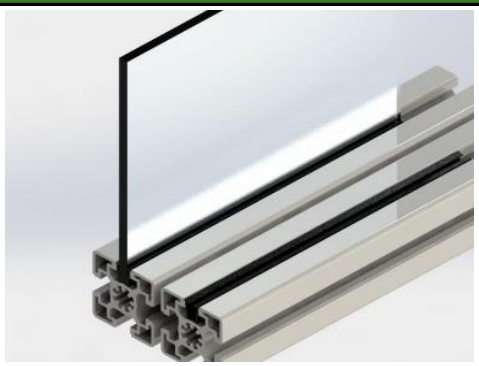

SIZE	DRAW	L (mm)	ITEM CODE	MATERIAL	COLOR
R8	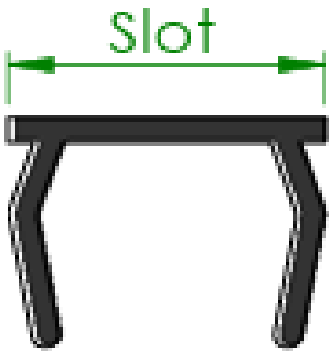	2000	DMI 2707.008.001	PVC	Black
			DMI 2707.008.002		Grey
R10			DMI 2707.010.001		Black
			DMI 2707.010.002		Grey
R8	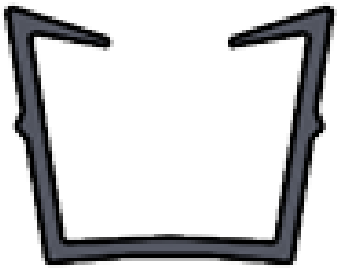	2000	DMI 2708.008.001	PP+TPE	Black
R10			DMI 2708.010.002		

PROFILE RAIL





DIMENSIONS	ITEM CODE	MATERIAL
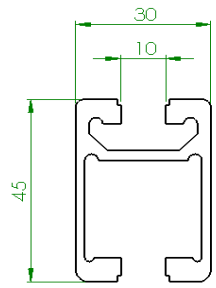	DMI-R10-3045LWP	ALUMINUM

TROYER

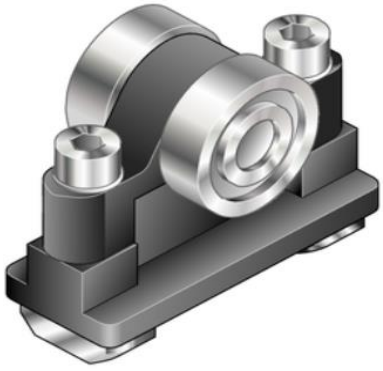



DIMENSIONS	ITEM CODE	MATERIAL
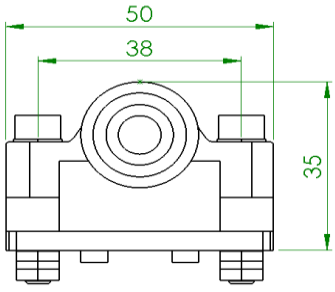	DMI-RS0100	PLASTIC PA AND STEEL

SLIDER





DIMENSIONS	ITEM CODE	MATERIAL
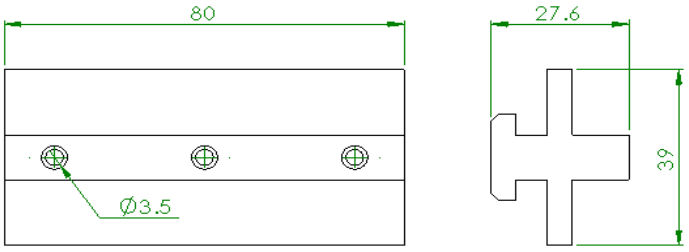	DMI-0300-A	PLASTIC POM

Sliding Door Assembly Components

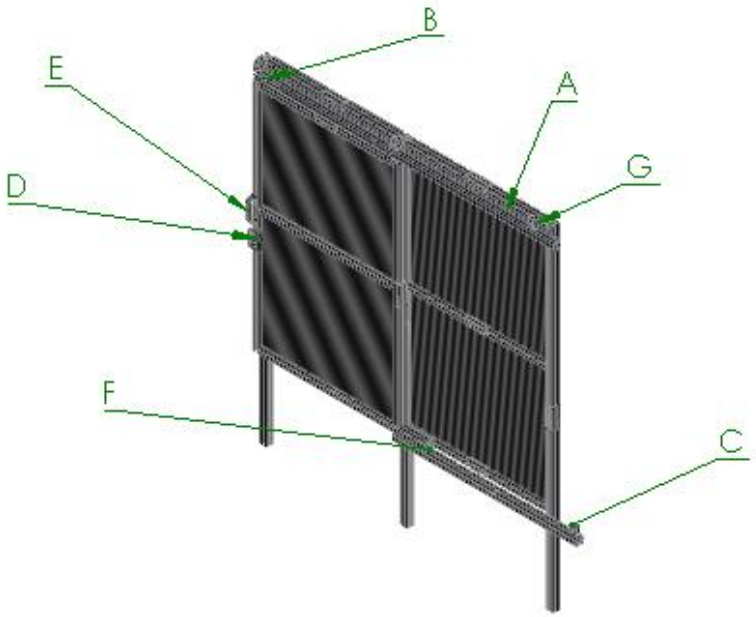

						
A. Profile Rails	B. Troyer	C. Buffer Block	D. Door Lock	E. Handle	F. Slider	G. Connection Angle

COVERS

COMPONENT		ITEM CODE	SIZE	THICKNESS	COLOR
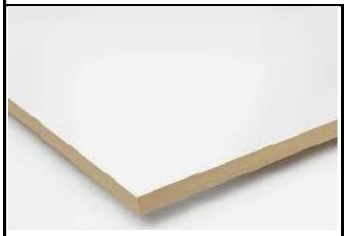	**MDF PANEL**	DMI-MDF-B-15	1.22x2.44 m	15 mm	WHITE
		DMI-MDF-N-15			BLACK
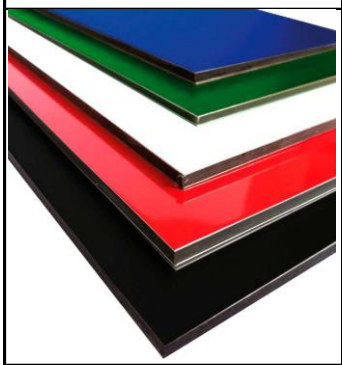	**ALUMINUM COMPOSITE PANEL**	DMI-PAC-G-03	1.22x2.44 m	3 mm	GREY
		DMI-PAC-B-04			WHITE
		DMI-PAC-N-05			METALIC
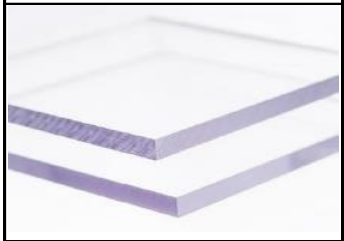	**POLYCARBONATE PANEL**	DMI-PC-C-03	1.22x2.44 m	3 mm	CLEAR
		DMI-PC-C-56		5.6 mm	CLEAR
	**CLEAR ACRYLIC PANEL**	DMI-AC-C-03	1.22x2.44 m	3 mm	CLEAR
		DMI-AC-C-06		6 mm	CLEAR
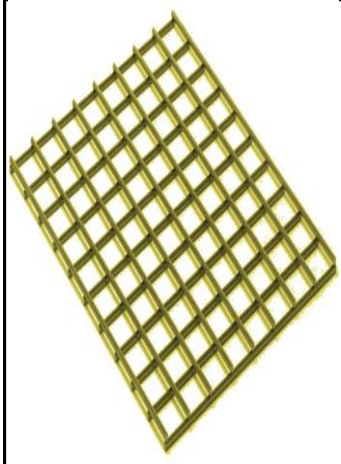	**PVC-COATED WIRE MESH**	DMI-MP-N-0101	1.22x2.44 m	1X1 in	BLACK
		DMI-MP-A-0101			YELLOW
		DMI-MP-N-0505		1/2x1/2 in	BLACK
		DMI-MP-A-0505			YELLOW
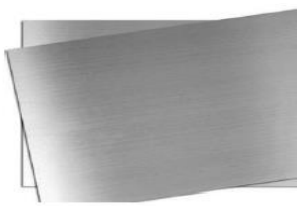	**STAINLESS STEEL SHEET**	DMI-LINOX-Cal	1.22x3.10 m	Cal. 20, 18, 16, 14, 12, 10.	2B FINISH

ACCESSORIES



ROLLERS RAIL 40



ITEM CODE	DIMENSIONS	MATERIAL	LOAD CAPACITY
DMI EF2046W	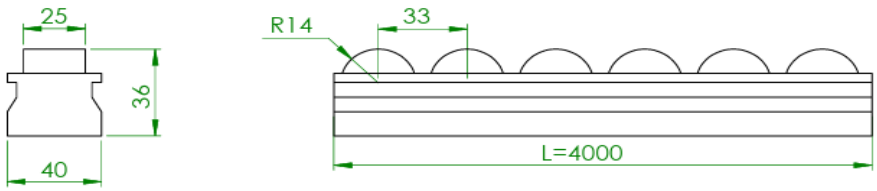	CARBON STEELI / NYLON WHEEL	100 Kg/m

ROLLER BRACKET



ITEM CODE	DIMENSIONS	MATERIAL	STOP
DMI-EF2044C	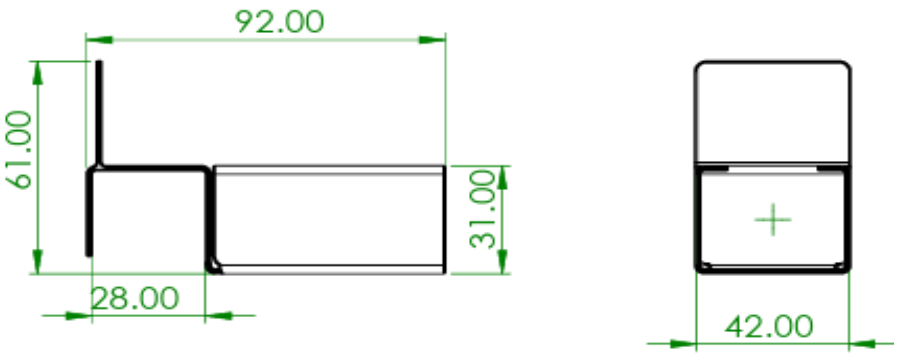	ZINC CARBON STEEL	NO
DMI EF2046W			YES

CABLE TIE MOUNTING

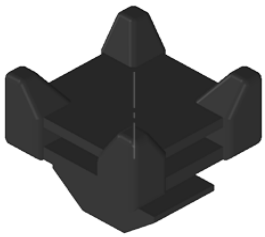



SIZE	DIMENSIONS	A	B	ITEM CODE	MATERIAL
R8	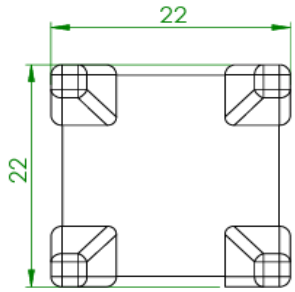	4.5	7	DMI 2709.008.001	NYLON
R10	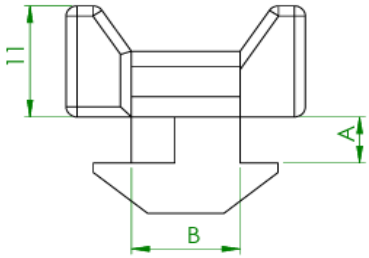	5.9	9	DMI 2709.010.002	

LED LIGHT FIXTURE



DIMENSIONS	A (mm)	ITEM CODE	WATTS	VOLT	K°
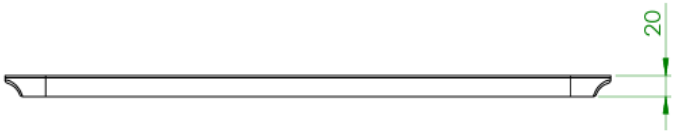	600	DMi-LL-060-18	18	120	6500
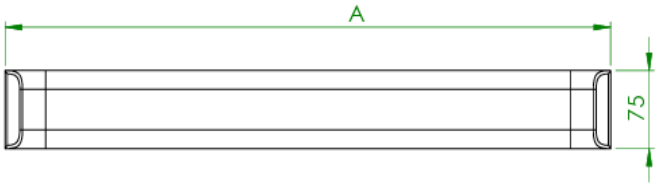	1200	DMi-LL-120-36	36		

D-MI Aluminio

ALUMINUM PROFILE AND SYSTEM ASSEMBLY

Contact us

Sales

Renato Guzman

477 309 0021

renato.guzm@gmail.com

León, Guanajuato

